RIDGWAY Rentals
PLANT RENTAL • HAULAGE • SALES • PARTS • SERVICE
01691 770171 0800 515155
sales@ridgwayrentals.com www.ridgwayrentals.com

JCB 540-170
17 Metre Reach Telehandler

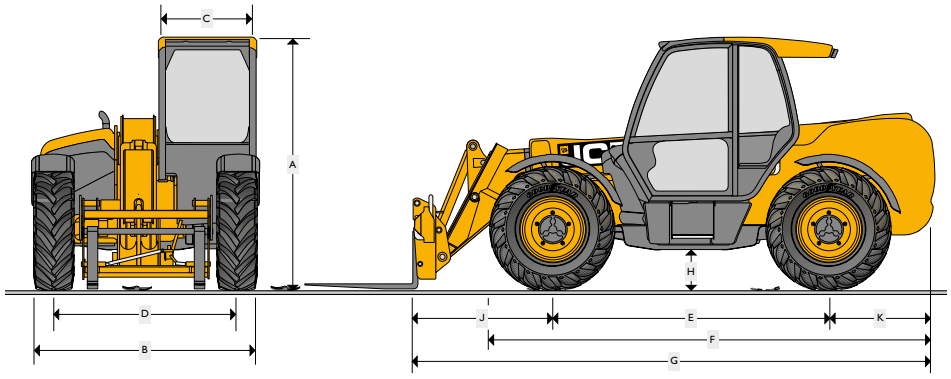

A	Overall height	m	2.69
B	Overall width (over tyres)*	m	2.44
C	Inside width of cab	m	0.94
D	Front track	m	1.90
E	Wheelbase	m	2.75
F	Overall length to front tyres	m	5.08
G	Overall length to front carriage	m	6.36
H	Ground clearance	m	0.40
J	Front wheel centre to carriage	m	1.94
K	Rear wheel centre to rear face	m	1.67
	Overall width with stabilisers fully deployed	m	3.55
	Outside turn radius (over tyres)	m	4.10
	Carriage rollback angle	degrees	39
	Carriage dump angle	degrees	8.8
	Weight	kg	12060
	Tyres		15.5/80-24

* Type dependent

540-170 Stabilisers retracted Sway

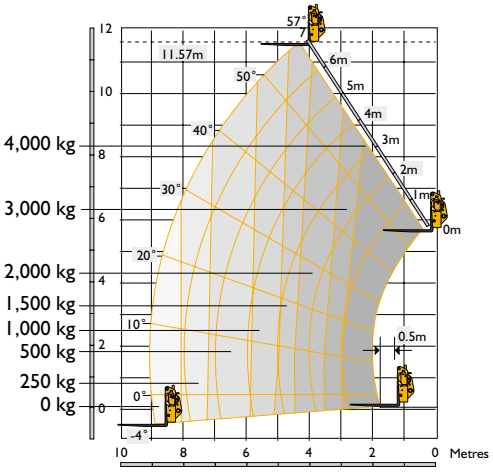

Maximum lift capacity	kg	4000
Lift capacity to full height	kg	1500
Lift capacity at full reach	kg	0
Lift height	m	11.57
Reach at maximum lift height	m	4.32
Maximum forward reach	m	9.04
Reach with 1 tonne load	m	5.76
Placing height	m	10.90

540-170 Stabilisers extended Sway

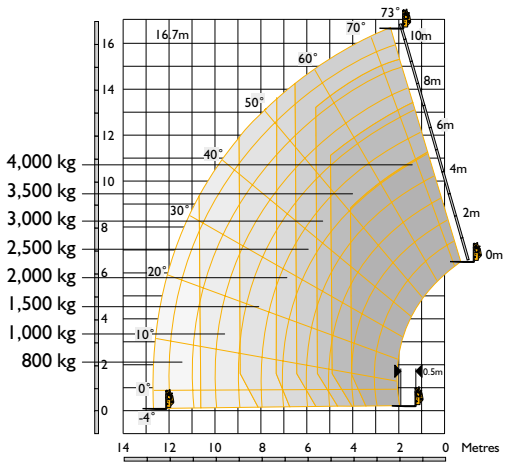

Maximum lift capacity	kg	4000
Lift capacity to full height	kg	2500
Lift capacity at full reach	kg	800
Lift height	m	16.7
Reach at maximum lift height	m	1.97
Maximum forward reach	m	12.50
Reach with 1 tonne load	m	11.70
Placing height	m	16.20

13 ton Excavator Hire | 20 Excavator Hire | 25 ton Excavator Hire | 30 ton Excavator Hire | 35 ton Excavator Hire | 40 Excavator Hire | 50 ton Excavator Hire | High Reach Excavator Hire | Long Reach Excavator Hire | Rubber Duck Hire | Dumper Hire | Skid Steer Hire | Telehandler Hire | Backhoe Loader Hire | Small Digger Hire | 1.5 ton Digger Hire | 3 ton Digger Hire | 5 ton Digger Hire | 8 ton Digger Hire | Dozer Hire | Dump Truck Hire | Loading Shovel Hire | Roller Hire | Excavator Attachment Hire | JCB Hire