3 Tonne Front Tip

MACH570

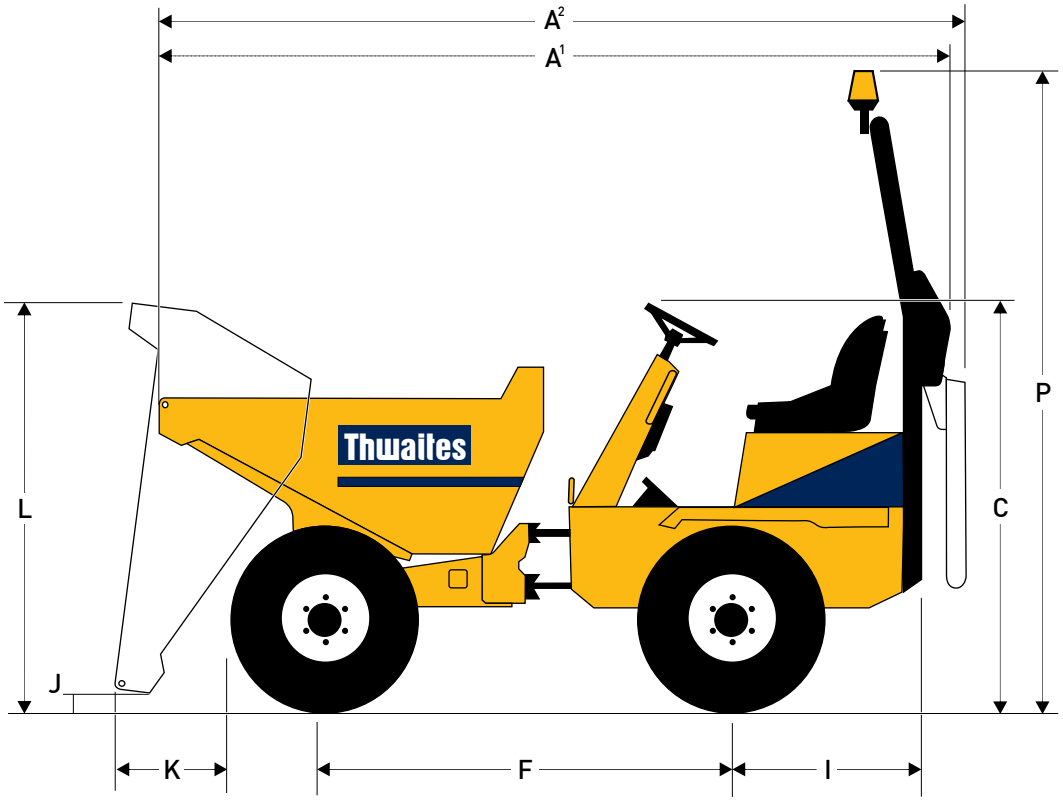

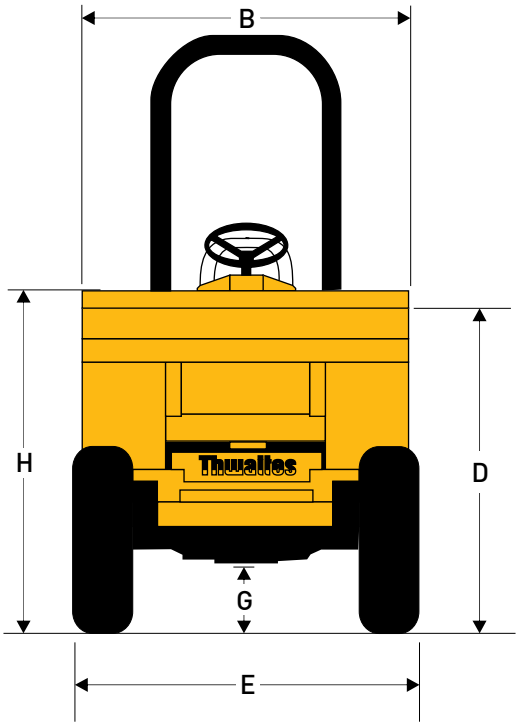

Dimensions (mm)	
A¹	3774
A²	3939
B	1650
C	1965
D	1365
E	1650
F	1950
G	330
H	1508
I	1032
J	305
K	615
L	2115
P	3092

SPECIFICATIONS

3 Tonne Front Tip

MACH570

Capacities		
	Max safe load	3000 kg
	Heaped	1680 litres
	Struck	1350 litres
	Water	1060 litres

Engine
Yanmar 3TNV88, 24.8 kW/33.2 bhp (nett) at 2800 rpm, 3-cylinder water-cooled direct-injection diesel. Max. torque 111 Nm (82 lbf ft). Electric starting, hour meter, battery isolator switch and heavy-duty cyclonic air cleaner positioned within the lockable engine compartment.

Noise Levels
Operator's ear 84 LpA, airborne sound power level 101 LwA (to 2000/14/EC).

Transmission
Heavy-duty gearbox, three forward, one reverse, constant mesh change on the move with nickel chrome case hardened gears. Drive through 240 mm dia spring-damped heavy duty clutch. Transfer reduction box.

Speeds		
	1	4.6 km/h (2.8 mph)
	2	10.7 km/h (6.6 mph)
	3	19.8 km/h (12.3 mph)
	Reverse	5.1 km/h (3.1 mph)

Tyres	
	295/80 x 15.3
	Load/Speed Index 119 A8
	Track grip tread

Brakes and Axles
Totally enclosed multiplate oil-immersed discs mounted on rear axle effective on all four wheels. Automatic adjustment for wear. Hand-operated parking brake. Heavy-duty axles with epicyclic reduction and fully floating halfshafts.

Kinglink Chassis
Front and rear chassis constructed from deep section folded steel plate, with three-point Kinglink giving centre articulation and oscillation for better stability, traction and extra safety on site. Remote greasing point provided for lubrication of top Kinglink articulation pin.

Skip
Hydraulically operated, 5 mm steel plate all round, fully welded, mouth and sides of skip reinforced with box sections giving greater strength to minimise skip damage. No material traps.

Seating & Controls
Adjustable suspension seat, accessible from both sides. Audible warning device at key start 'on' position. Super-bright warning lights for all critical functions. Electric horn. Large pedal pads with handbrake and hydraulic controls ready to hand.

Service Access
Lockable 3-sided cover opens to provide easy access from ground level to engine service points, all located on the same side. Moulded diesel and hydraulic tanks positioned low in the chassis side members, permitting access to the filler caps from ground level.

Electrics
Wiring harness contained within conduits and all electrical components water resistant to IP65/67 standards.

Steering and Hydraulics
Hydraulic priority power steering. Filter mounted on the top of the tank accessible from ground level. Combined suction and return filtration for all services. Hydraulic test points fitted as standard.

Tank Capacities		
	Fuel	24.5 litres
	Hydraulic	25.0 litres

Shipping Cube	12.5 m³ (with folded ROPS)
Unladen Weight	2010 kg
Clearance Diameter	9.2 m
Towing Bracket	Standard

ROPS
For the UK and other markets where it is a legal requirement a fully approved folding ROPS frame is fitted as standard.

Optional EXtras
Beacon. Full road lighting equipment. UK road equipment. Anti-theft device.

Distributor

Thwaites Ltd. Leamington Spa, Warwickshire CV32 7NQ, England
Tel +44 (0)1926 422471 Fax +44 (0)1926 337155
www.thwaitesdumpers.co.uk

We reserve the right to change all specifications without prior notice.
Printed in England 02/2017